Micro-Ray

RoHS Compliance

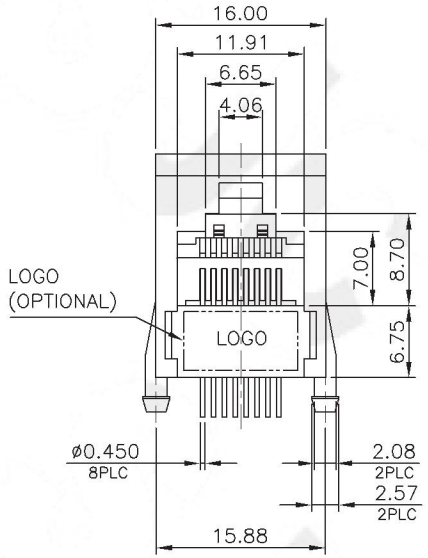

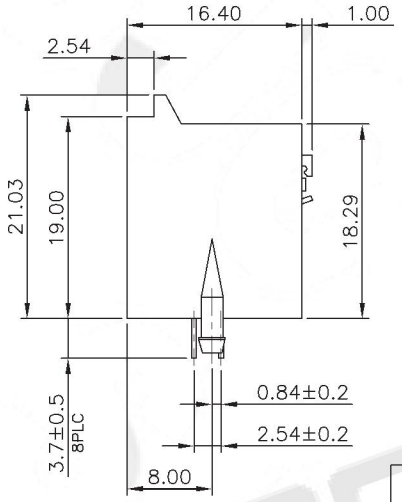

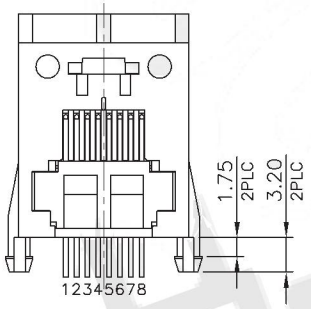

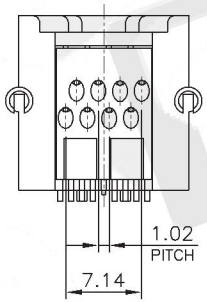

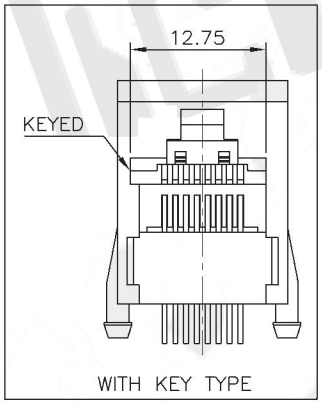

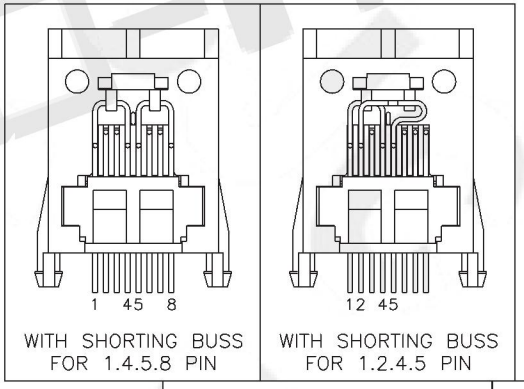

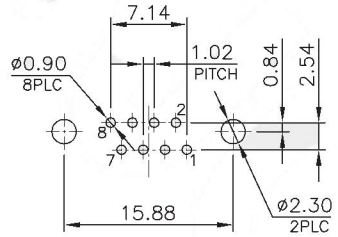

RECOMMENDED PCB LAYOUT
PCB THICKNESS: 1.6mm
TOLERANCE: ±0.05mm (TOP VIEW)

THIS DRAWING IS A CONTROLLED DOCUMENT.
DO NOT SCALE DRAWING.

DIMENSIONS: MM	TOLERANCES UNLESS OTHERWISE SPECIFIED:
THIRD ANGLE PROJECTION	X ± – X.X ± 0.25 X.XX ± 0.13 X.XXX ± 0.05 ANGLES ± –
MATERIAL SEE NOTES	FINISH SEE NOTES
DWN A.HUANG	DATE APR–06–2017
CHK M.CHANG	APR–06–2017
APVD W.J.YANG	APR–07–2017

Micro-Ray

TITLE
RJ45, ROUND PIN,
SIDE ENTRY PCB JACK

SIZE	CAUGE CODE		
A3	–	MR-960801	
WEIGHT – GRAMS Ref.		REV 7	SHEET 1