Micro-Ray

RoHS Compliance

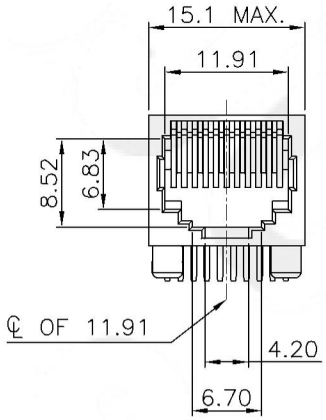

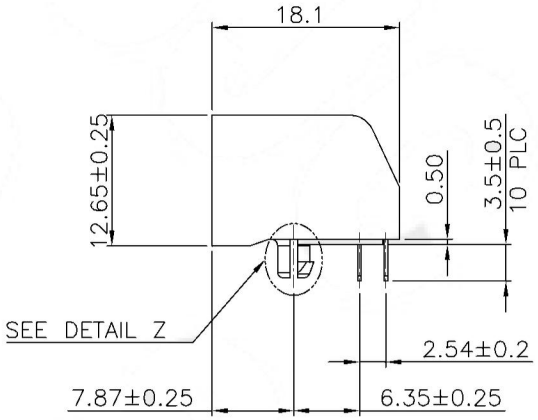

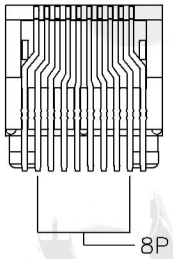

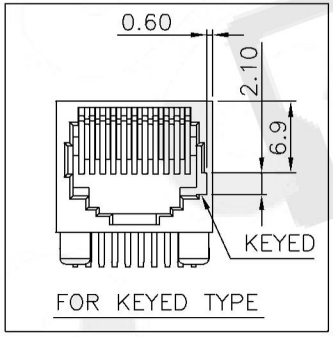

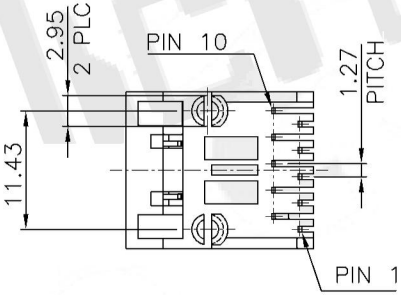

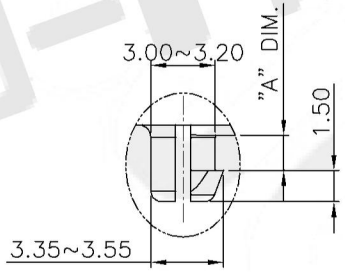

DETAIL Z
SCALE 2:1

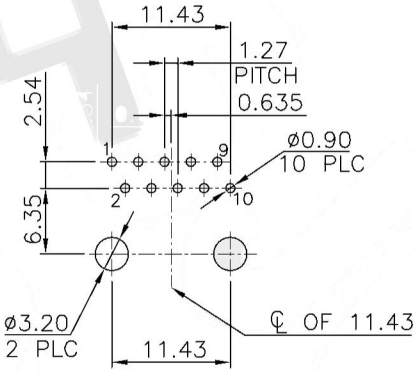

RECOMMENDED PCB LAYOUT

RECOMMENDED PCB THICKNESS: 1.6mm
TOLERANCE: ±0.05 (TOP VIEW)

LTR	DESCRIPTION	DATE	APVD

REVISIONS

THIS DRAWING IS A CONTROLLED DOCUMENT.
DO NOT SCALE DRAWING.

DIMENSIONS: MM	TOLERANCES UNLESS OTHERWISE SPECIFIED:
THIRD ANGLE PROJECTION	0 PLC ± – 1 PLC ±0.25 2 PLC ±0.13 3 PLC ±0.05 ANGLES ± –
MATERIAL SEE NOTES	FINISH SEE NOTES
DWN A.HUANG	DATE JAN–10–2012
CHK M.CHANG	JAN–10–2012
APVD W.J.YANG	JAN–10–2011

Micro-Ray

TITLE 10POSITION, FLANGELESS, DIP, SIDE ENTRY PCB JACK

SIZE	CAUGE CODE	
A3	–	MR-963104

WEIGHT – GRAMS Ref. REV 8 SHEET 1