Micro-Ray

RoHS Compliance

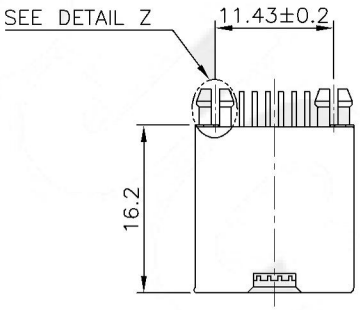

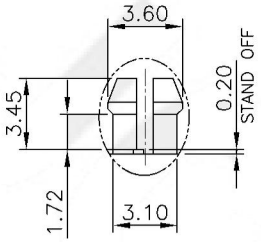

DETAIL Z
SCALE 2:1

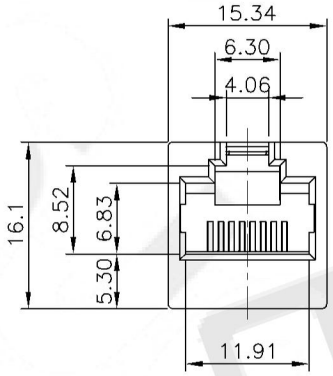

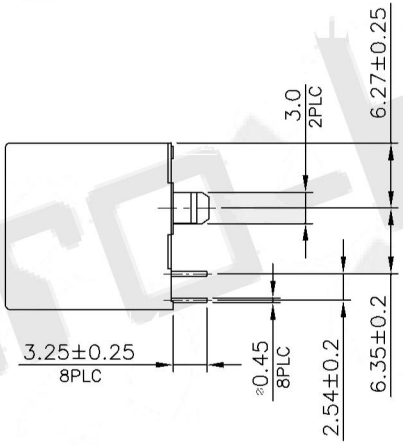

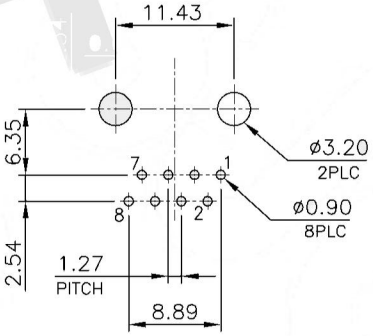

RECOMMENDED PCB LAYOUT
PCB THICKNESS: 1.6mm
TOLERANCE: ±0.05mm (TOP VIEW)

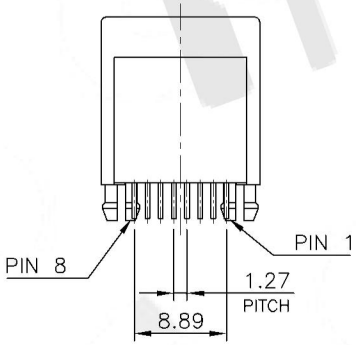

LTR	DESCRIPTION	DATE	APVD
△	–	–	–

REVISIONS

THIS DRAWING IS A CONTROLLED DOCUMENT.
DO NOT SCALE DRAWING.

DIMENSIONS: MM	TOLERANCES UNLESS OTHERWISE SPECIFIED:
THIRD ANGLE PROJECTION	X ± – X.X ± 0.25 X.XX ± 0.13 X.XXX ± 0.05 ANGLES ± –
MATERIAL SEE NOTES	FINISH SEE NOTES
DWN A.LI	DATE FEB–21–2019
CHK A.HUANG	FEB–21–2019
APVD M.CHANG	FEB–22–2019

Micro-Ray

TITLE
RJ45, WITHOUT SHELL,
ROUND PIN, TOP ENTRY PCB JACK

SIZE	CAUGE CODE	
A3	–	MR-964701

WEIGHT – GRAMS Ref. REV 1 SHEET 1