Micro-Ray

RoHS Compliance

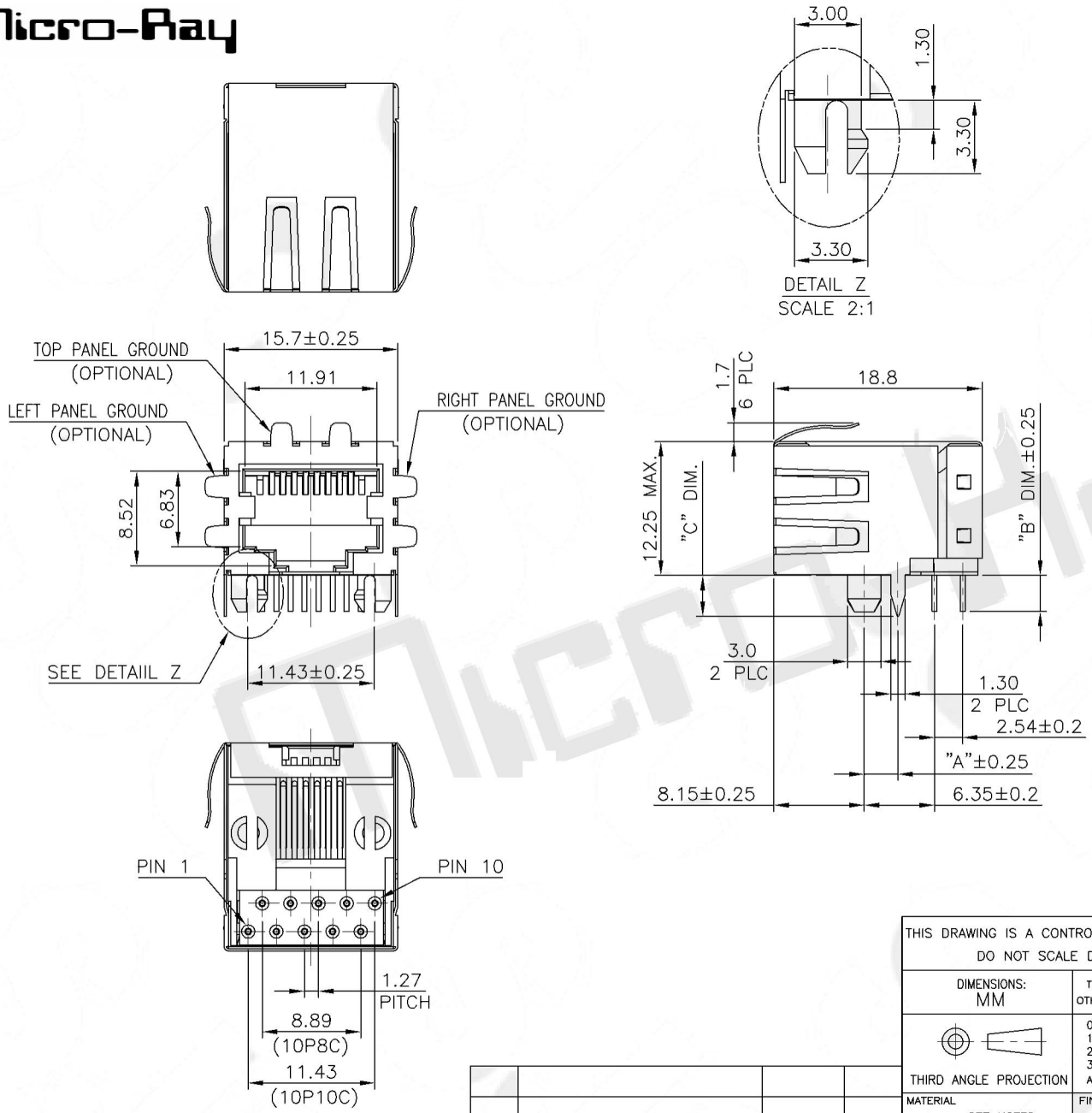

RECOMMENDED PCB LAYOUT

RECOMMENDED PCB THICKNESS: 1.6mm
TOLERANCE: ±0.05 (TOP VIEW)

LTR	DESCRIPTION	DATE	APVD

REVISIONS

THIS DRAWING IS A CONTROLLED DOCUMENT.
DO NOT SCALE DRAWING.

DIMENSIONS: MM

THIRD ANGLE PROJECTION

TOLERANCES UNLESS OTHERWISE SPECIFIED:

0 PLC	± –
1 PLC	±0.25
2 PLC	±0.13
3 PLC	±0.05
ANGLES	± –

MATERIAL: SEE NOTES
FINISH: SEE NOTES

DWN	A.HUANG	SEP–27–2011
CHK	M.CHANG	SEP–27–2011
APVD	W.J.YANG	SEP–28–2011

Micro-Ray

TITLE
10POSITION, SIDE ENTRY, ROUND PIN, VERY LOW PROFILE, WITH SHELL PCB JACK

SIZE A3 | CAUGE CODE – | MR-970502

WEIGHT – GRAMS Ref. | REV 8 | SHEET 1