Micro-Ray

RoHS Compliance

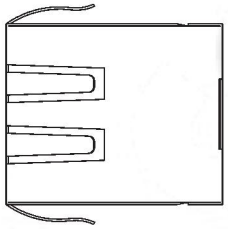

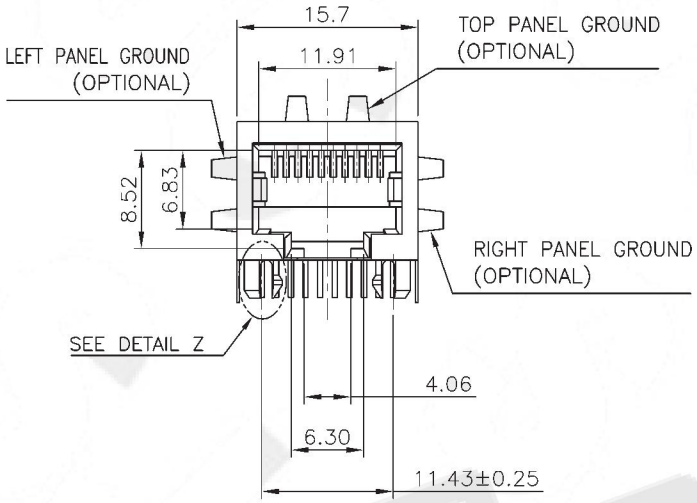

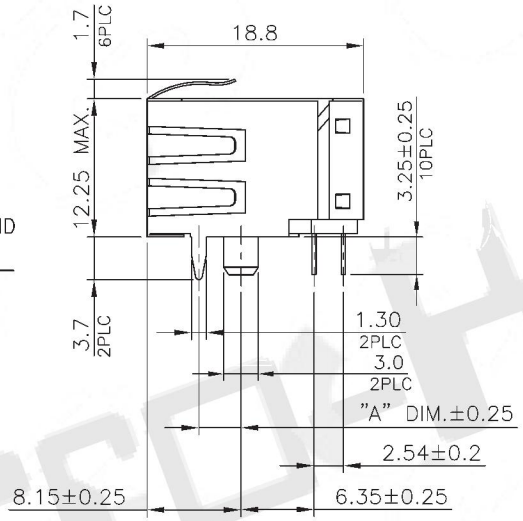

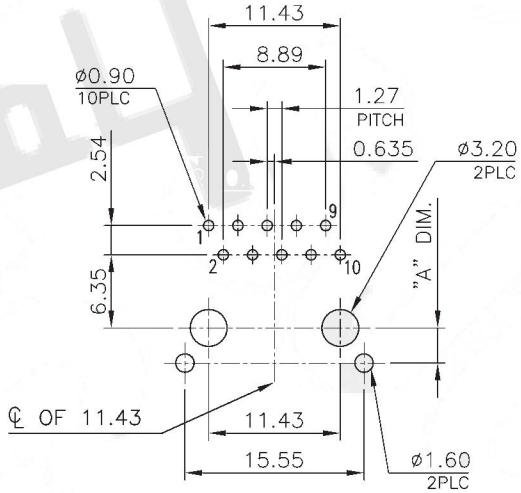

RECOMMENDED PCB LAYOUT

RECOMMENDED PCB THICKNESS: 1.6mm
TOLERANCE: ±0.05 (TOP VIEW)

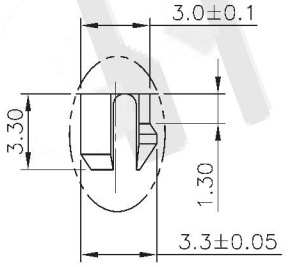

DETAIL Z
SCALE 2:1

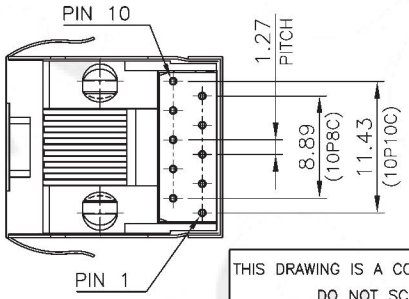

THIS DRAWING IS A CONTROLLED DOCUMENT. DO NOT SCALE DRAWING.		Micro-Ray	
DIMENSIONS: MM	TOLERANCES UNLESS OTHERWISE SPECIFIED: X ± – ; X.X ± 0.25 ; X.XX ± 0.13 ; X.XXX ± 0.05 ; ANGLES ± –		
THIRD ANGLE PROJECTION		VERY LOW PROFILE, SIDE ENTRY PCB JACK	
MATERIAL SEE NOTES	FINISH SEE NOTES		
DWN A.HUANG	DATE MAY–05–2015	SIZE A3 / CAUGE CODE –	MR-973601
CHK M.CHANG	MAY–05–2015		
APVD W.J.YANG	MAY–06–2015	WEIGHT – GRAMS Ref.	REV 1 / SHEET 1