Micro-Ray

RoHS Compliance

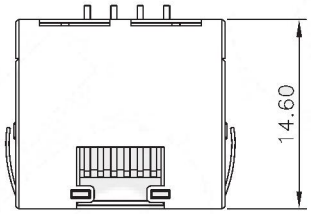

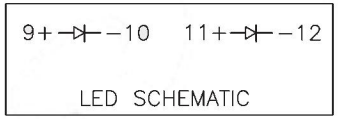

LED SCHEMATIC

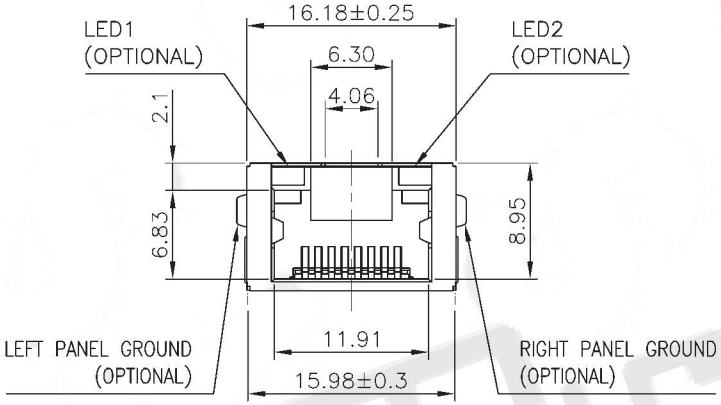

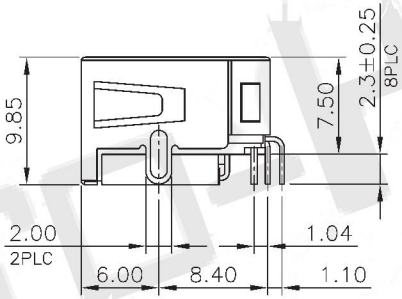

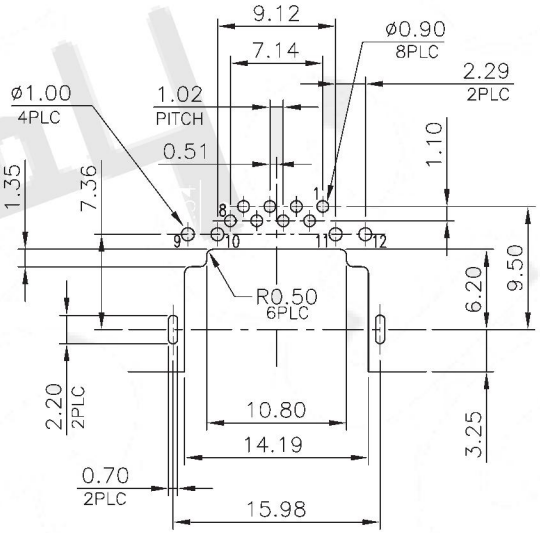

RECOMMENDED PCB LAYOUT

RECOMMENDED PCB THICKNESS: 1.2mm.
TOLERANCE: ±0.05 (TOP VIEW)

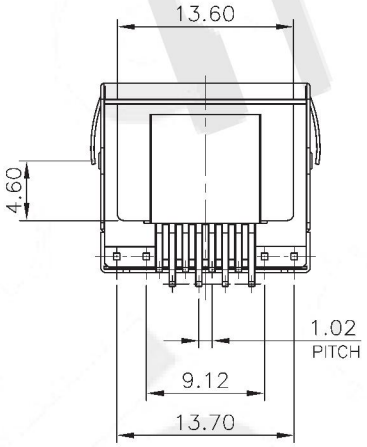

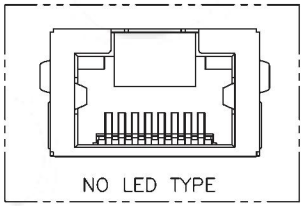

NO LED TYPE

THIS DRAWING IS A CONTROLLED DOCUMENT. DO NOT SCALE DRAWING.		Micro-Ray	
DIMENSIONS: MM	TOLERANCES UNLESS OTHERWISE SPECIFIED: X ± – ; X.X ± 0.25 ; X.XX ± 0.20 ; X.XXX ± 0.10 ; ANGLES ± –		
THIRD ANGLE PROJECTION		WITH SHELL, DIP TYPE	
MATERIAL SEE NOTES	FINISH SEE NOTES		
DWN A.HUANG	DATE SEP–22–2016	SIZE A3	CAUGE CODE –	MR-979811
CHK M.CHANG	SEP–22–2016		
APVD W.J.YANG	SEP–23–2016	WEIGHT – GRAMS Ref.	REV 2	SHEET 1