Micro-Ray

RoHS Compliance

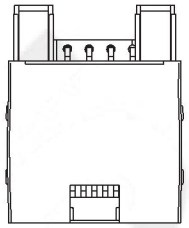

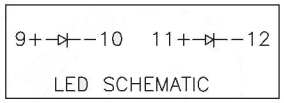

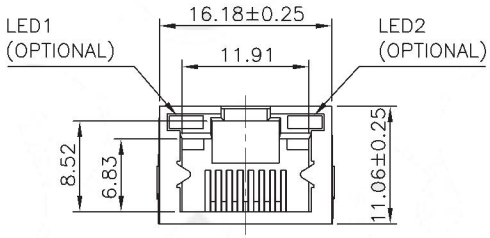

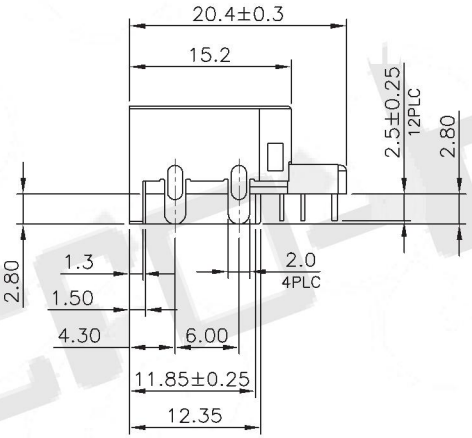

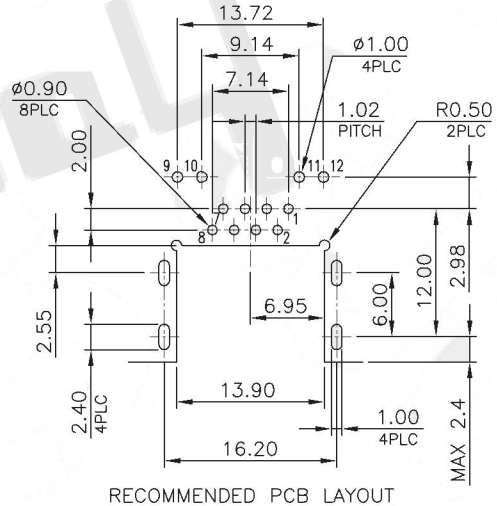

RECOMMENDED PCB LAYOUT
PCB THICKNESS: 1.2mm
TOLERANCE: ±0.05mm (TOP VIEW)

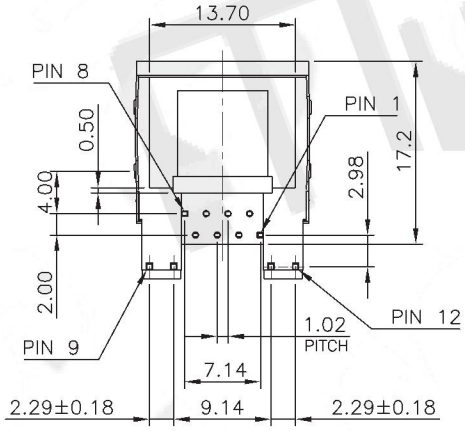

THIS DRAWING IS A CONTROLLED DOCUMENT. DO NOT SCALE DRAWING.		Micro-Ray	
DIMENSIONS: MM	TOLERANCES UNLESS OTHERWISE SPECIFIED:		
THIRD ANGLE PROJECTION	X ± – X.X ± 0.25 X.XX ± 0.20 X.XXX ± 0.10 ANGLES ± –	TITLE	MODULAR JACK, RJ45, WITH LED'S, DIP TYPE
MATERIAL SEE NOTES	FINISH SEE NOTES		
DWN A.HUANG	DATE MAR–23–2017	SIZE A3 / CAUGE CODE –	MR-979814
CHK M.CHANG	MAR–23–2017		
APVD W.J.YANG	MAR–24–2017	WEIGHT – GRAMS Ref.	REV 1 / SHEET 1