Micro-Ray

# RoHS Compliance

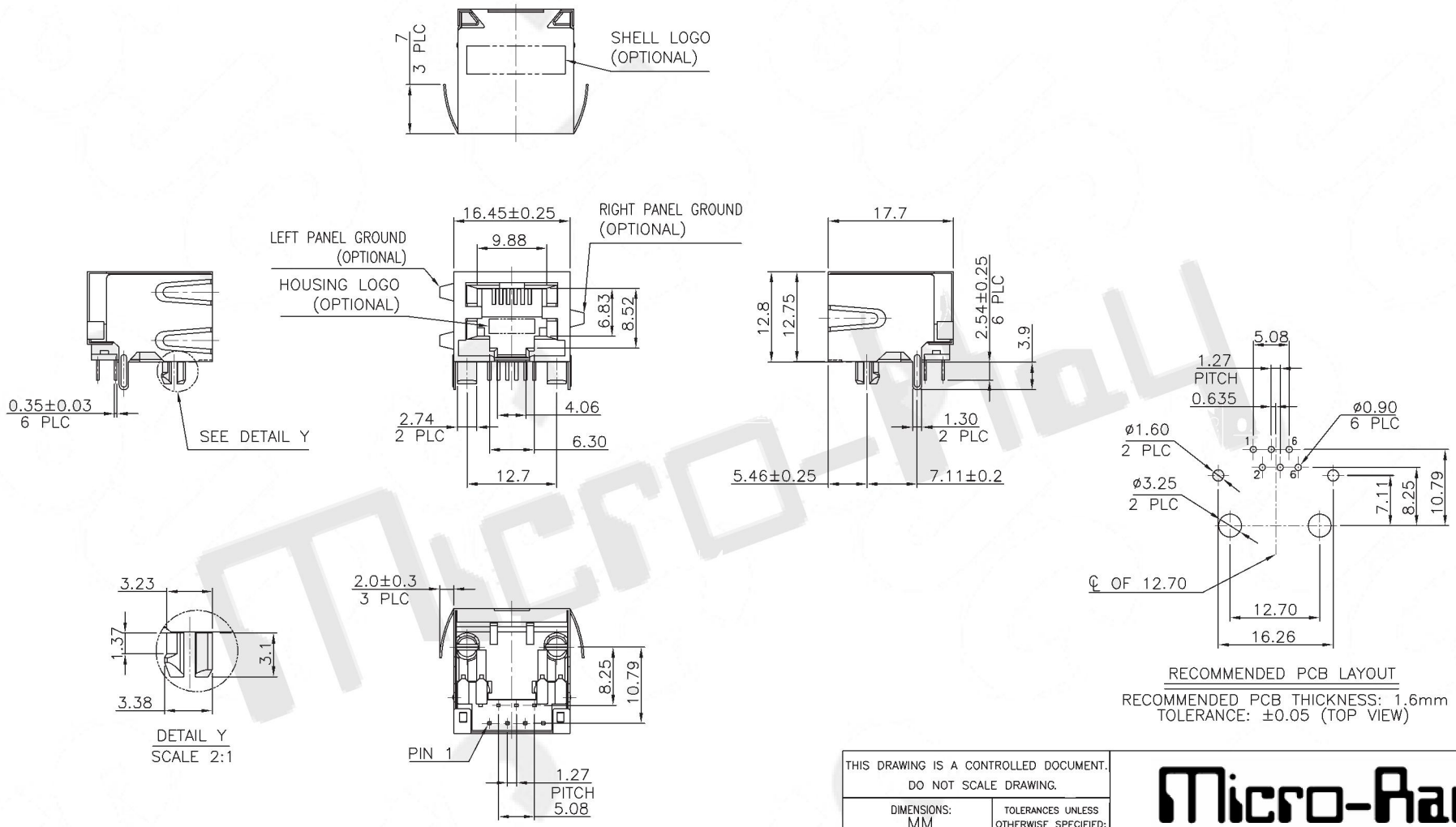


RECOMMENDED PCB LAYOUT

RECOMMENDED PCB THICKNESS: 1.6mm
TOLERANCE: ±0.05 (TOP VIEW)

| | | | |
|---|---|---|---|
| THIS DRAWING IS A CONTROLLED DOCUMENT. DO NOT SCALE DRAWING. | | Micro-Ray | |
| DIMENSIONS: MM | TOLERANCES UNLESS OTHERWISE SPECIFIED: | | |
| THIRD ANGLE PROJECTION | X ± – <br> X.X ± 0.25 <br> X.XX ± 0.13 <br> X.XXX ± 0.05 <br> ANGLES ± – | TITLE STACKED RJ11 BOTTOM PART CONNECTOR, W/O LED, SHIELDED, THRU HOLE | |
| MATERIAL SEE NOTES | FINISH SEE NOTES | | |
| DWN A.HUANG | DATE MAY–04–2017 | SIZE A3 / CAUGE CODE – | MR-985011 |
| CHK M.CHANG | MAY–04–2017 | | |
| APVD W.J.YANG | MAY–05–2017 | WEIGHT – GRAMS Ref. | REV 1 / SHEET 1 |