MICRO-RAY ELECTRONICS, INC.

www.micro-ray.com

REVISION RECORD				
REV.	DESCRIPTION	ECN No.	APPROVED	DATE

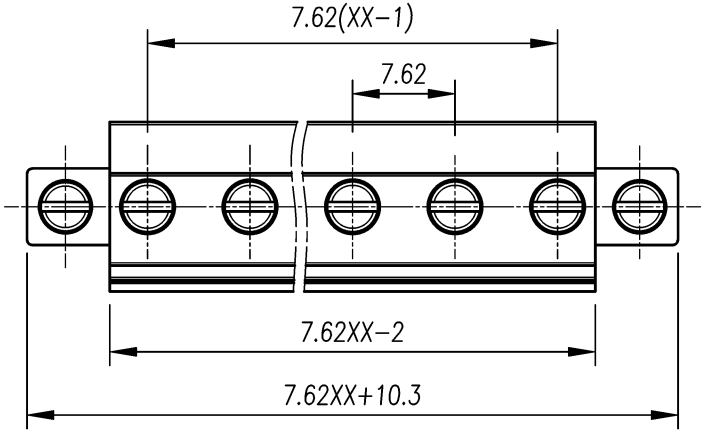

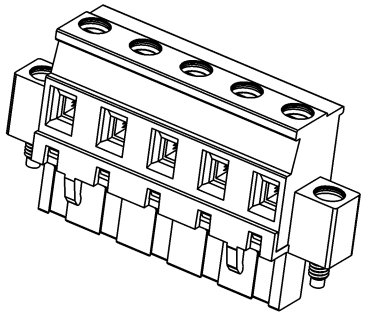

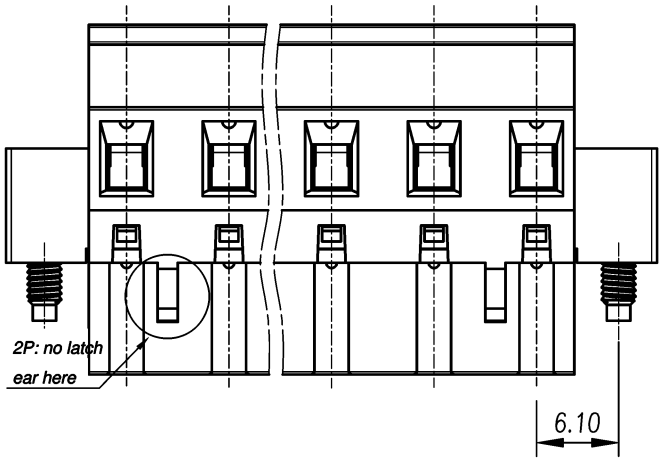

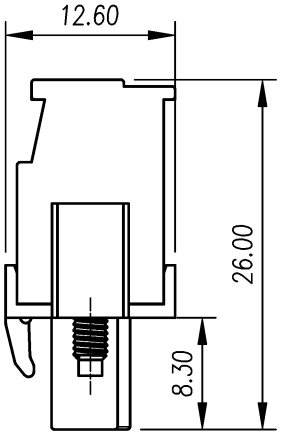

UL/CUL Technical Data			
Use Group	B	C	D
Rated Voltage [V]	300	-	300
Rated Current [A]	15	-	10
Wire Range Solid/Stranded [AWG]	28-12		
Withstanding Voltage	1600V/1Min		

IEC Technical Data			
Overvoltage Category	III	III	II
Contamination Class	3	2	2
Rated Voltage [V]	500	630	1000
Rated Current [A]	12	12	12
Impulse withstand voltage [KV]	6.0	6.0	6.0
Conductor cross section Solid/ flexible [mm²]	0.2-2.5		

Material	
Insulation Material	PA66
Imflammability	UL94V-0
Contactor Material	Copper alloy
Contactive Coating	Ni Plated

Other Data	
Pitch Poles [mm] / [P]	7.62 / 02~24
Stripping Length [mm]	7~8
Screw Torque(Max) [N.m]	M3/0.5
Operating temperature [°C]	-40~105
Soldering temperature	-
Pin Dimensions [mm]	-
PCB PCB Hole Diameter [mm]	-

linear dimension(Tolerances Standard GB/T 14486-2008)								—	▱	⊥
variable range	to 6	over 6 to 10	over 10 to 30	over 30 to 60	over 60 to 100	over 100 to 160	over 160 to	to 10	over 10 to 100	over 100 to
tolerance	±0.20	±0.30	±0.50	±0.70	±1.00	±1.30	±1.60	0.10	0.30	0.60

MICRO-RAY ELECTRONICS, INC.

THIRD ANGLE PROJECTION

REV V0

TITLE MR-2EDGKAM-7.62-XXP-1YY-00A